K3 POWER

1191
PIASTRA A MURO – ARTICULATED BRACKET

ÉTRIER À ARTICULATION – GELENKBÜGEL

goccia ILLUMINAZIONE

Conforme alle norme europee / Conformity with European standards EN 60 598-1
Conforme aux normes européennes / Laut europäischen Gesetze EN 60 598-1

cod doc. 91383
cod. 089138300

1

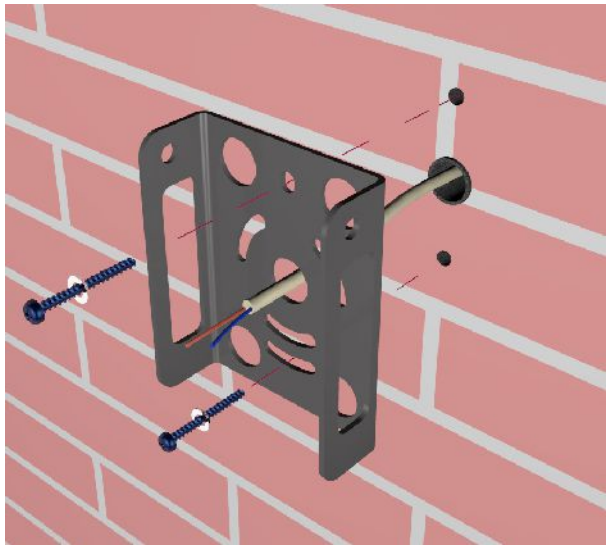

2

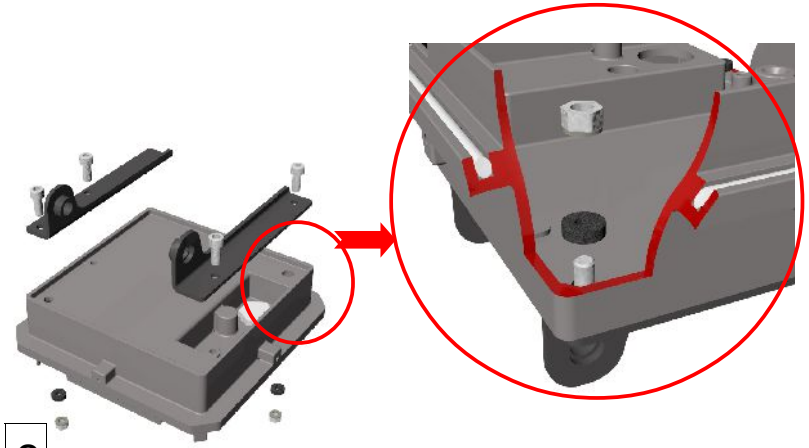

3

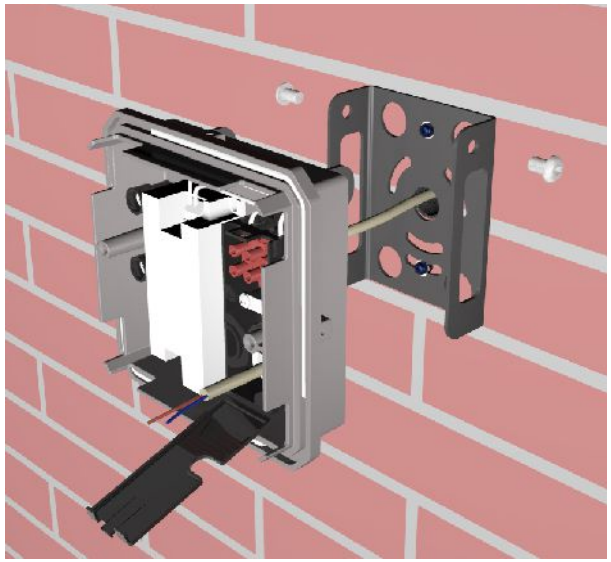

4

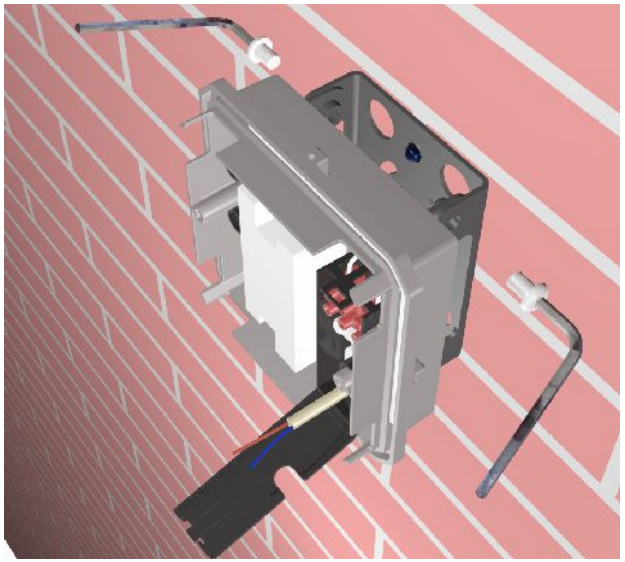

Montare la lampada K3 POWER secondo le sue istruzioni.

Install the K3 POWER fixture as per its own instructions.

Monter la lumière K3 POWER selon les propres instructions.

Die K3 POWER Leuchte laut ihren Anleitungen montieren