goccia ILLUMINAZIONE

CLOCK 120 LED 15W

4665



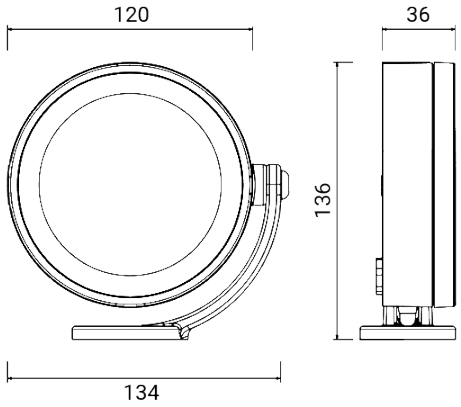

Outdoor spotlight for wall, stem and ground installation

Adjustable luminaire with stable fastening in the chosen point

Material: low copper content die-cast aluminium

Diffuser: ultra-white transparent tempered glass, sealed to the frame

Light source: mains voltage LED module, compatible with phase-cut dimmers

The spotlight is hermetically sealed with a two-component resin and supplied with a 1,5 m H05RN-F buriable cable. The cable can pass through a special hole in the base of the arm

Finish with double painting (epoxy-based primer and polyester powder coating) after anti-corrosion treatments

On request versions (additional code):

MT7 7 m cable length

HC Honeycomb optic 10°

Dimensions	Ø 120 x H 136 x 36 mm
Light source	LED
Wattage	15 W
Power supply	220-240 V | 50/60 Hz
Light source output	1660 lm
System output	1050 lm
System efficiency	70 lm/W
Color Rendering Index – CRI	≥80
LED energy class	E (4000K), F (2700K), F (3000K)
LED lifetime	L70 B10 > 45.000 h
Standard Deviation Color Matching (SDCM)	MacAdam step 3
Electrical insulation class	Class I
IP rating	IP 67
Impact resistance rating	IK 08 (5 Joules)
Norms	EN 60598-1 / -2-1
Weight	0.72 kg
Conformity	CE UKCA

CODE OPTIONS

FINISH

AG	ALUMINIUM GREY
AN	ANTHRACITE
BR	BRONZE
VE	GREEN

on request:

CO	CORTEN

COLOUR TEMP.

27K	2700K
3K	3000K
4K	4000K

OPTIC

standard	40°

optional optics

12	12°
90	90°

goccia ILLUMINAZIONE

Goccia Illuminazione srl
via E.Fermi 59/65 - 25020 Poncarale (BS) Italy
+39 030 2640761 - info@www.goccia.it

IMQ CERTIFIED QUALITY MANAGEMENT SYSTEM ISO 9001:2015

IQNET RECOGNIZED CERTIFICATION

CLOCK 120 LED 15W

4665

BI WHITE

CLOCK 120 LED 15W

4665

ACCESSORIES

CLOCK STEM
H 600

4693

CLOCK STEM
H 1200

4694

CLOCK STEM
H 2300

4699

ACCESSORIES
WATERPROOF CONNECTOR



1941

ACCESSORIES
WATERPROOF CONNECTOR



1944

ACCESSORIES
WATERPROOF CONNECTOR



1942

CLOCK
120 SHIELD



4669

CLOCK STEM
JOINT



4695

CLOCK
SPIKE



4691

CLOCK
WALL ARM 380



4692

CLOCK STEM
WALL SUPPORT



4681

CLOCK STEM
WALL 900

4682

CLOCK STEM
WALL 1800

4683

CLOCK
STRAP

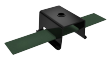

1602

CLOCK THE SERIES

