IANUS URBAN 1x – BURIABLE LED 16W

7081



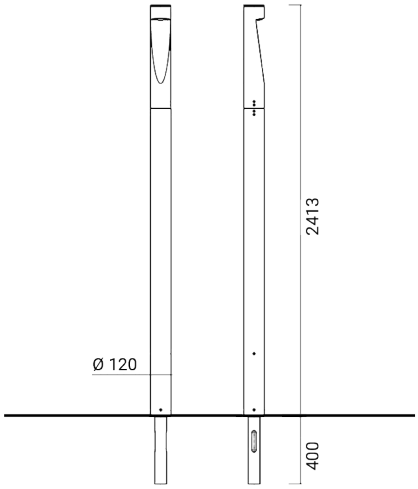

Urban lighting pole complete with luminaire

Equipped with buriable anchoring unit

Material: Ø 120 mm luminaire in low copper content die-cast aluminium coupled in continuity with extruded aluminum pole

Photo-etched polycarbonate lenticular diffuser

Built-in driver

Light source: recessed LED unit to house dedicated optics

Watertight wiring through the supplied cable that powers the integrated driver. Further M16 cable gland for additional wiring, positioned in the lower part of the closing cap in technopolymer

Optional surge protection device (SPD) to be ordered separately

Color matching side fixing screws in stainless steel

Finish with double painting (epoxy-based primer and polyester powder coating) after anti-corrosion treatments

On request versions (additional code):

CL2	Class II
D*	Dimmable version
D6	Midnight function

Dimensions	Ø 120 x H 2400 mm
Light source	LED
Wattage	16 W
Power supply	220-240 V | 50/60 Hz
Light source output	1952 lm
System output	934 lm
System efficiency	58 lm/W
Color Rendering Index – CRI	80
LED energy class	E (3000K), E (4000K), F (2700K)
LED lifetime	L80 B10 86.000 h
Standard Deviation Color Matching (SDCM)	MacAdam step 3
Electrical insulation class	Class I
IP rating	IP 66
Impact resistance rating	IK 10 (20 joules)
Norms	EN 60598-1 / -2-1
Weight	16 kg
Conformity	CE UK CA

CODE OPTIONS

FINISH

AG	ALUMINIUM GREY
AN	ANTHRACITE
BR	BRONZE

on request:

CO	CORTEN

COLOUR TEMP.

27K	2700K
3K	3000K
4K	4000K

OPTIC

standard	DIFFUSE

optional optics

N	ASYMMETRIC NARROW
W	ASYMMETRIC WIDE

Goccia Illuminazione srl
via E.Fermi 59/65 - 25020 Poncarale (BS) Italy
+39 030 2640761 - info@www.goccia.it

IANUS URBAN 1x – BURIABLE LED 16W

7081

ACCESSORIES

ACCESSORIES
SPD



1965

IANUS THE SERIES

