T-LUX STAN 150 LED 10W

5551



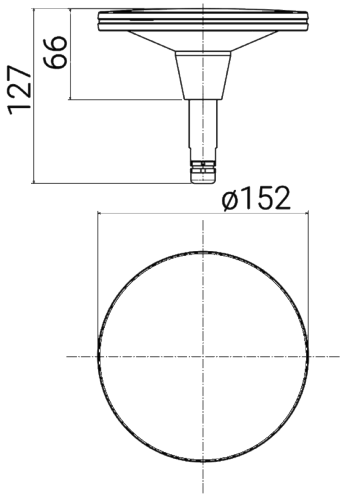

Outdoor luminaire for stem installation

The Ø 150 version is recommended for 300 mm high stem (code 3101) and 600 mm high stem (code 3102)

Material: dissipating upper disc in low copper content die-cast aluminium; the particular convex shape avoids water stagnation

Photo-etched polycarbonate diffuser to prevent horizontal glare and to grant high output downwards

Light source: mains voltage LED module, compatible with phase-cut dimmers

Watertight wiring through 1,5 m cable supplied

Finish with double painting (epoxy-based primer and polyester powder coating) after anti-corrosion treatments

On request versions (additional code):

24V 24V low voltage
MT7 7 m cable length

Dimensions	Ø 152 x H 66 mm
Light source	LED
Wattage	10 W
Power supply	220-240 V | 50/60 Hz
Light source output	1200 lm
System output	753 lm
System efficiency	75 lm/W
Color Rendering Index – CRI	80
LED energy class	E
LED lifetime	L70 B50 > 50.000 h
Standard Deviation Color Matching (SDCM)	MacAdam step 3
Electrical insulation class	Class I
IP rating	IP 65
Impact resistance rating	IK 09 (10 Joules)
Norms	EN 60598-1 / -2-1
Weight	0.65 kg
Conformity	CE UKCA

CODE OPTIONS

FINISH

AG	ALUMINIUM GREY
AN	ANTHRACITE
CO	CORTEN
BR	BRONZE
VE	GREEN

COLOUR TEMP.

27K	2700K
3K	3000K
4K	4000K

T-LUX STAN 150 LED 10W

5551

COMPONENTS

T-LUX STAN
STEM H 300



3101

T-LUX STAN
STEM H 600



3102

T-LUX STAN
STEM H 900



3103

ACCESSORIES

ACCESSORIES
SPIKE



4696

ACCESSORIES
ANCHOR PLATE



4697

ACCESSORIES
IN-GROUND BOX



4698

T-LUX OLLIE
BEAM LIMITER



5555

T-LUX THE SERIES



