T-LUX BOWLER 150 LED 10W

5558



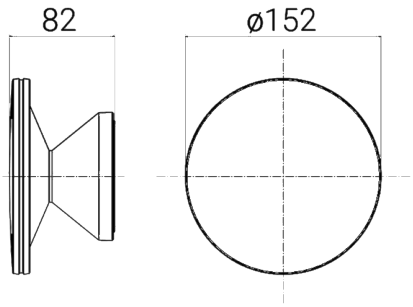

Outdoor luminaire for wall installation

Material: dissipating disc in low copper content die-cast aluminium / Cone in low copper content die-cast aluminium; its harmonious shape contains the wiring and guides the luminous flux towards the wall

Photo-etched polycarbonate diffuser to prevent side glare and to grant a homogeneous effect with 360° diffused light

Light source: mains voltage LED module, compatible with phase-cut dimmers

Finish with double painting (epoxy-based primer and polyester powder coating) after anti-corrosion treatments

On request versions (additional code):
24V 24V low voltage

Dimensions	Ø 152 x 82 mm
Light source	LED
Wattage	10 W
Power supply	220-240 V | 50/60 Hz
Light source output	1200 lm
System output	607 lm
System efficiency	61 lm/W
Color Rendering Index – CRI	80
LED energy class	E
LED lifetime	L70 B50 > 50.000 h
Standard Deviation Color Matching (SDCM)	MacAdam step 3
Electrical insulation class	Class I
IP rating	IP 65
Impact resistance rating	IK 09 (10 Joules)
Norms	EN 60598-1 / -2-1
Weight	0.66 kg
Conformity	CE UK CA

CODE OPTIONS

FINISH

AG	ALUMINIUM GREY
AN	ANTHRACITE
CO	CORTEN
BR	BRONZE
BI	WHITE

COLOUR TEMP.

27K	2700K
3K	3000K
4K	4000K

T-LUX BOWLER 150 LED 10W

5558

ACCESSORIES

T-LUX OLLIE
BEAM LIMITER



5555

T-LUX THE SERIES




