ACCESSORIES ADAPTOR

5506



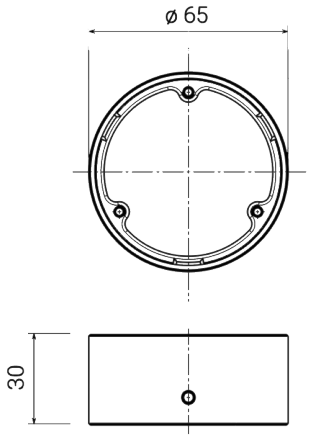

Adaptor to be installed on any 60 mm diameter pole

Material: die-cast aluminium

Dimensions	Ø 60 x H 30 mm
Weight	0.1 kg
Conformity	CE UK CA

ACCESSORIES ADAPTOR

5506

FIXTURES RELATED

IANUS 60
1X



7071

I-MAGO
ALUMINIUM



5510

CANTHARELLUS
150



5521

CANTHARELLUS
200



5522

I-LUX
ALUMINIUM



5517

I-LUX
STAINLESS STEEL



5540

I-MAGO
STAINLESS STEEL



5500

IANUS 60
2X



7072