PASSUM UP Ø 245 aluminium round flange

1541

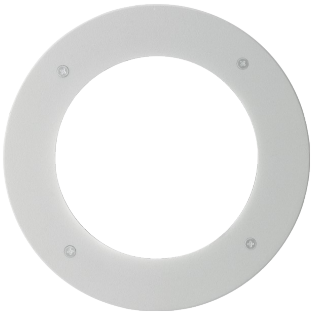

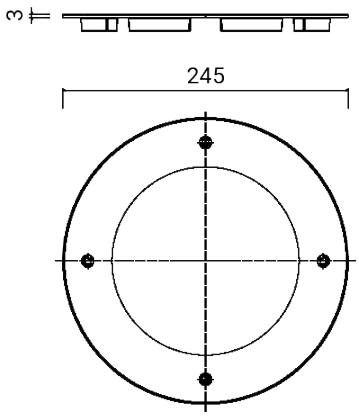

Covering flange

Normally supplied separately from the luminaire

Material: low copper content die-cast aluminium

Stainless steel screws

Finish with double painting (epoxy-based primer and polyester powder coating) after anti-corrosion treatments

Dimensions	Ø 245 x 3 mm
Weight	0.4 kg
Conformity	CE UKCA

PASSUM UP Ø 245 aluminium round flange

1541

FIXTURES RELATED

PASSUM UP
Ø 245 ALUMINIUM



1440

PASSUM UP
Ø 245 ALUMINIUM



1442

PASSUM UP
Ø 245 ALUMINIUM



1444

PASSUM ASYMMETRIC
Ø 245 ALUMINIUM



1449

PASSUM UP RGBW
Ø 245 ALUMINIUM



1482

CODE OPTIONS

FINISH

AG	ALUMINIUM GREY
AN	ANTHRACITE